Commercial Blinds UK

Elegance System

Elegance System

- ✓ Top end high quality product for internal and external use.
- ✓ Small channels with PVC insert to hold the fabric perfectly in place, this results in;
  - A completely closed system with no light gap on the sides.
  - No flapping of the fabric due to winds or draughts.
- ✓ Side channels with cleverly designed stainless steel springs for optimum fabric tension
- ✓ Quality fabrics from the CB collection.
  - Wide variety of fabrics possible (Mermet, Soltis, Copaco, Dickson)
- ✓ Solid cassette available in 2 different shapes and 3 different sizes
  - Shapes: Curved or Square
  - Sizes: 83, 103, 123 (in mm height)
  - Cassette equipped with brushes for optimal fabric guidance and acoustic comfort.
- ✓ Easy installation with removable lug (escape system) with no visible screws after installation.
- ✓ All fixings consists of stainless steel
- ✓ Qualicoat powder coating in RAL colour of choice, powder coating is carried out after cutting and drilling so we ensure a high quality product with perfectly finished edges.
  - All components are pre-treated for optimal weather protection
  - Semi-gloss or matt available for most colours
- ✓ High wind resistance due to the zip channels and use of robust components

Elegance 83

Elegance 103

Elegance 123

- ➢ **All 3 Sizes also available in a rounded cassette:**

System Information

❖ **Escape, easy installation system:**

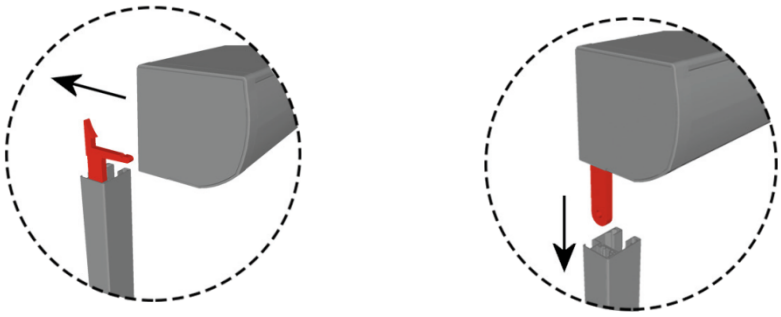

- ✓ Easy installation with removable lug
- ✓ Perfect and strong fit due to high quality stainless steel lug
- ✓ Left image: Installation from the front (ideal solution for recessed windows)
- ✓ Right image: Installation from above

❖ **Cassette:**

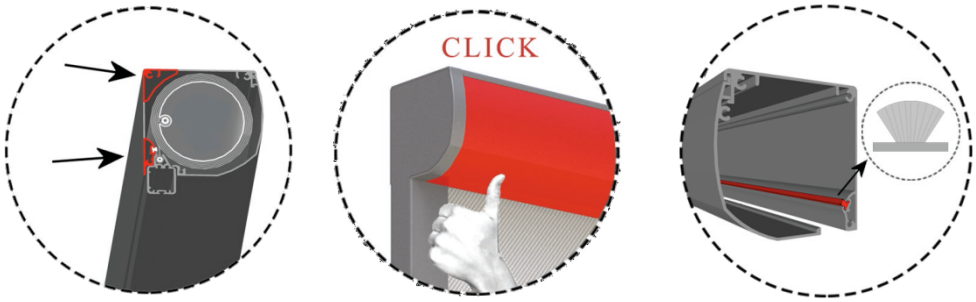

- ✓ Left: Hollows in the cassette for extra strength and stability
- ✓ Middle: Front cover installed by easy click-on (no screws required or visible!)
- ✓ Right: Internal brush for protection and guidance of the fabric, provides a better seal-off for light, insects and acoustic isolation.

❖ **Power Cable system:**

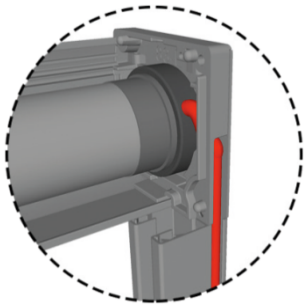

- ✓ Power cable of the motor can run through the backside of the guide.
- ✓ Also all other (standard) exits of the cable are possible.

System Information

- **Guides/side tracks:**

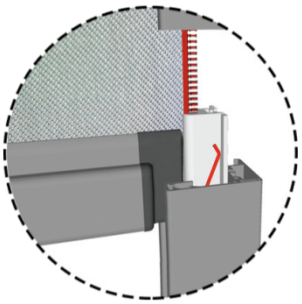

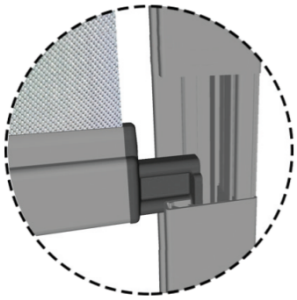

✓ Left: Side track with original zip from Japan
✓ Right: Also possible without zip *(sometimes required for the airflow)*

✓ Left: No visible screws due to click-on guide (for both; recess of face fitting)
✓ Right: Easy opening with tool

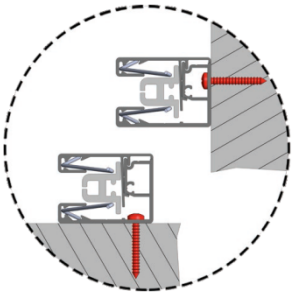

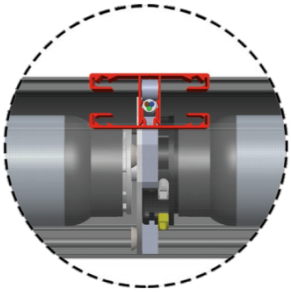

✓ Left: Installation can be done with hidden fixings for recess or face fix installation.
✓ Right: Couple-guide also possible for neighbouring systems.

System Information

Applications:

- ✓ Shading / UV Protection
- ✓ Light & Energy Control
- ✓ Darkening (bedroom or presentation)
- ✓ Privacy
- ✓ Glare control *(important to see digital devices – such as; TV, computer and mobile phone)*
- ✓ Acoustic / Isolation
- ✓ Insect (Fly) screen
- ✓ Rain / Wind protection
- ✓ Transparant window ("Luxscreen")
- ✓ Printed / Projection screen

Maximum dimensions:

• **Elegance 83**	Width:	3000 mm	Height:	2000 mm
• **Elegance 103**	Width:	4500 mm	Height:	4000 mm
• **Elegance 123**	Width:	6000 mm	Height:	5000 mm

➢ ***For larger systems we refer to our other systems: 150, 160 or 205***

Technical Data:

Cassettes

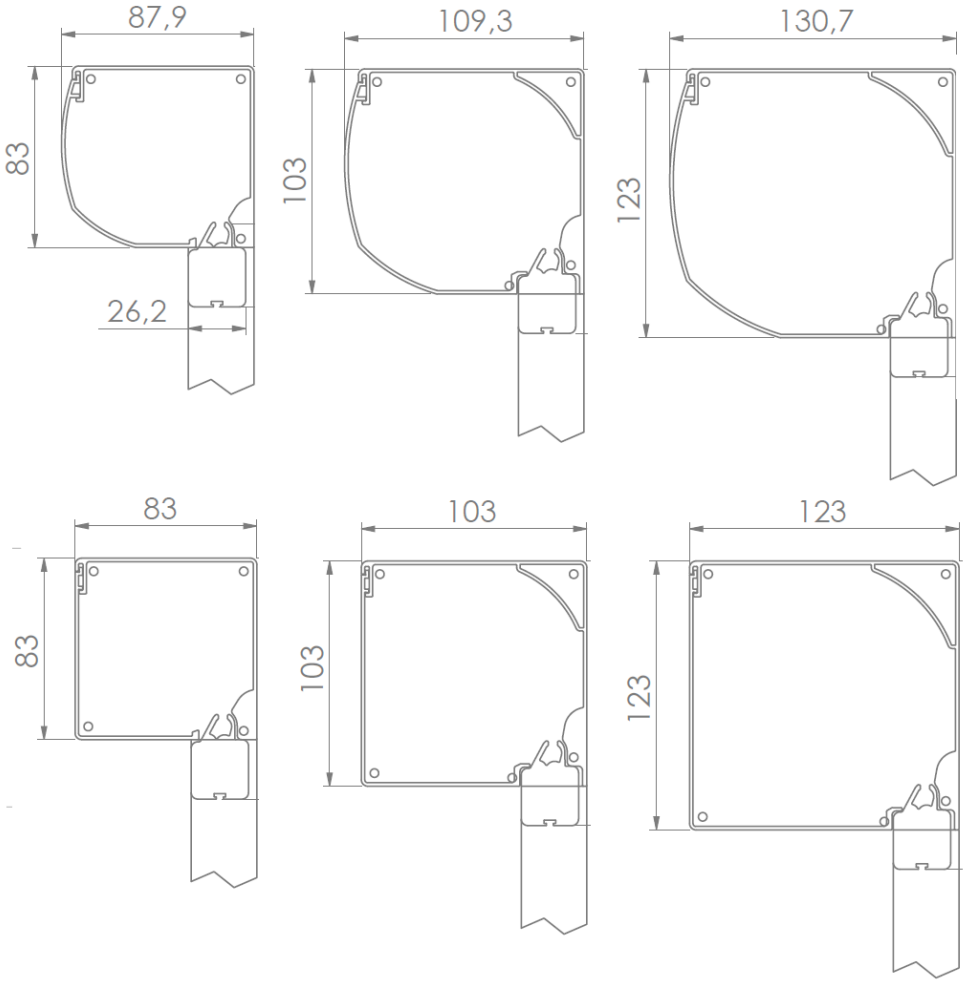

Track

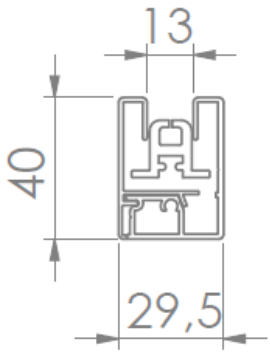

Images